RS5

RISC-V®

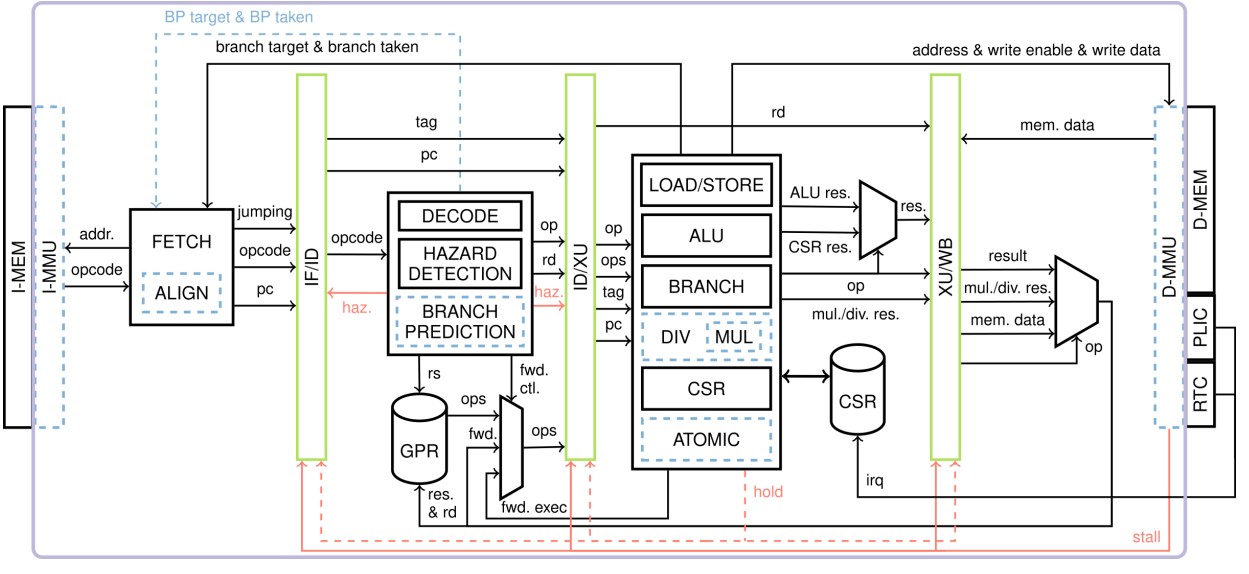
BP target & BP taken
branch target & branch taken
address & write enable & write data
I-MEM
I-MMU
addr.
opcode
FETCH
ALIGN
jumping
opcode
pc
IF/ID
opcode
DECODE
HAZARD DETECTION
BRANCH PREDICTION
haz.
op
rd
haz.
tag
pc
rd
ID/XU
op
ops
tag
pc
LOAD/STORE
ALU
BRANCH
DIV
MUL
CSR
ATOMIC
ALU res.
CSR res.
res.
op
mul./div. res.
XU/WB
result
mul./div. res.
mem. data
op
mem. data
D-MMU
D-MEM
PLIC
RTC
rs
GPR
ops
fwd.
ctl.
fwd.
ops
res. & rd
fwd. exec
CSR
irq
hold
stall